NEXT ASSY.	USED ON

NOTES
1. WIRE DIAMETER ____ ±1.5%
2. MATERIAL TYPE ____
3. NUMBER OF TURNS ____
4. BURNING LENGTH ____
5. TOTAL WIRE LENGTH ____
6. COLD RESISTANCE @ 25°C ____
   TOLERANCES FROM ±3%
7. AVAILABLE COATED IN ALUMINA OR UNCOATED
8. COATED WIRE DIAMETER ____ TOLERANCES FROM ±.00025

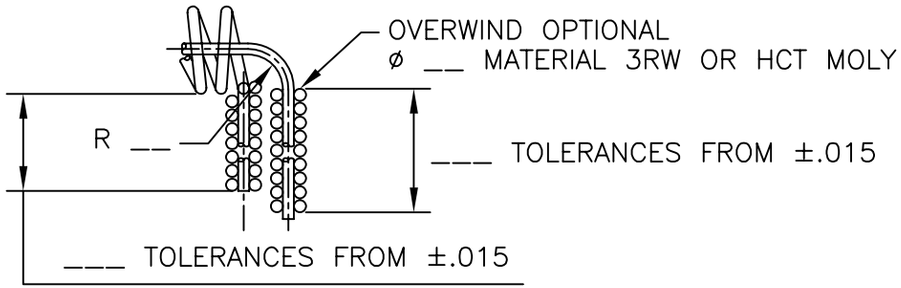

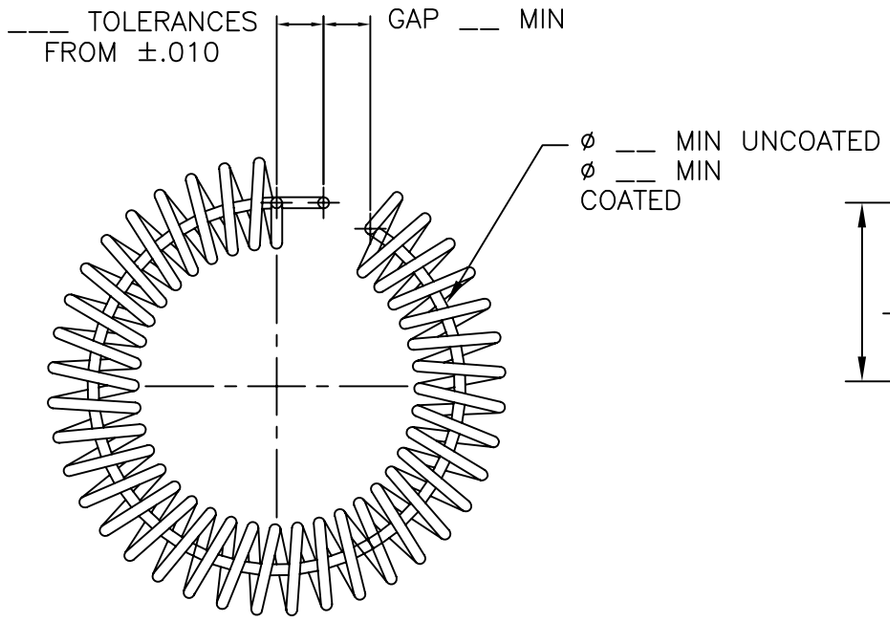

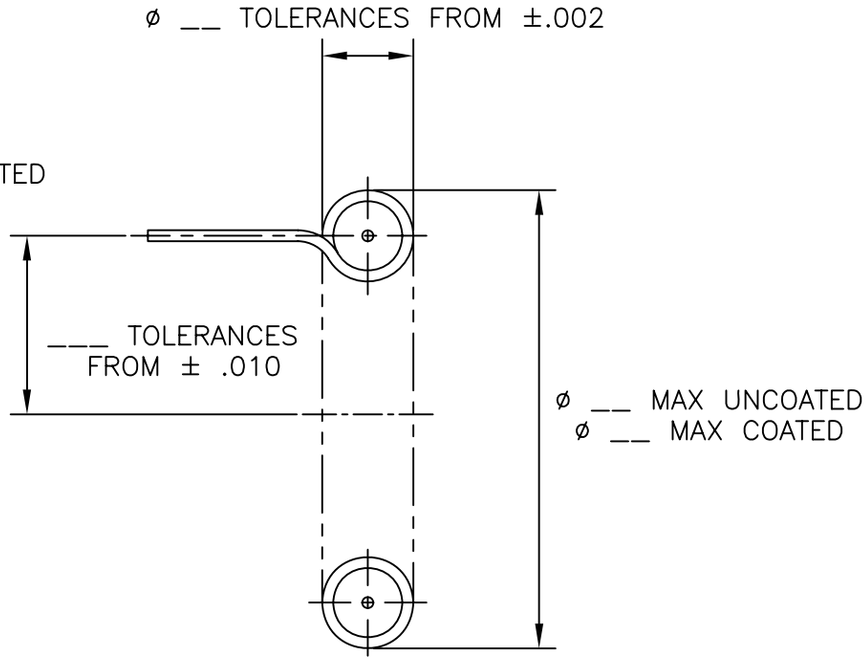

REV.	DATE	CHANGE

SCALE	NONE
DR. BY	DATE
CH. BY	DATE
APR. BY	DATE

TITLE
TOROID - CENTER RETURN

MAT'L
SEE NOTES

ALL DIMENSIONS IN INCHES UNLESS OTHERWISE NOTED

STANDARD TOLERANCES
FRAC ±1/64 2PL ±.02 ANG ±1/2°
1PL ±.1 3PL ±.005 SUR 63

UNION CITY FILAMENT CORP.
1039A HOYT AVE, RIDGEFIELD, NJ 07657
201-945-3366

SIZE A

DWG #